OntoBREP - An Ontology for CAD Data

ERF 2016 Workshop – Ontologies for Robots

Alexander Perzylo

fortiss GmbH
An-Institut Technische Universität München

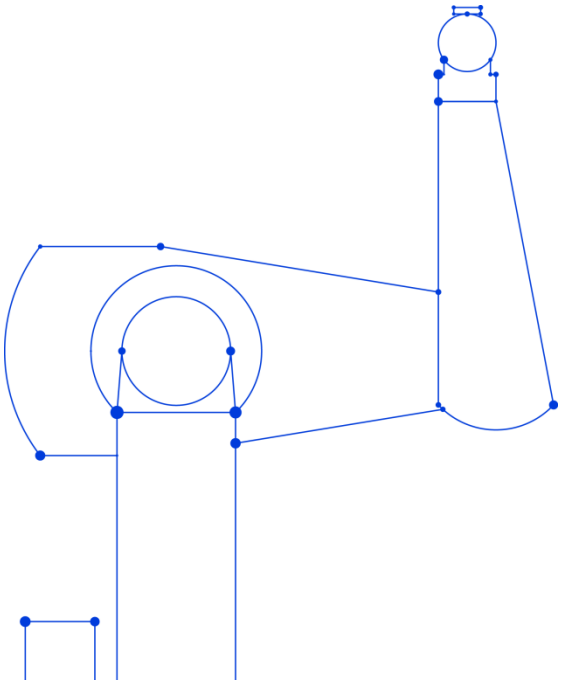

Motivation

SME suitable instruction of industrial robots

Semantic knowledge as the backbone

Process, object, workcell

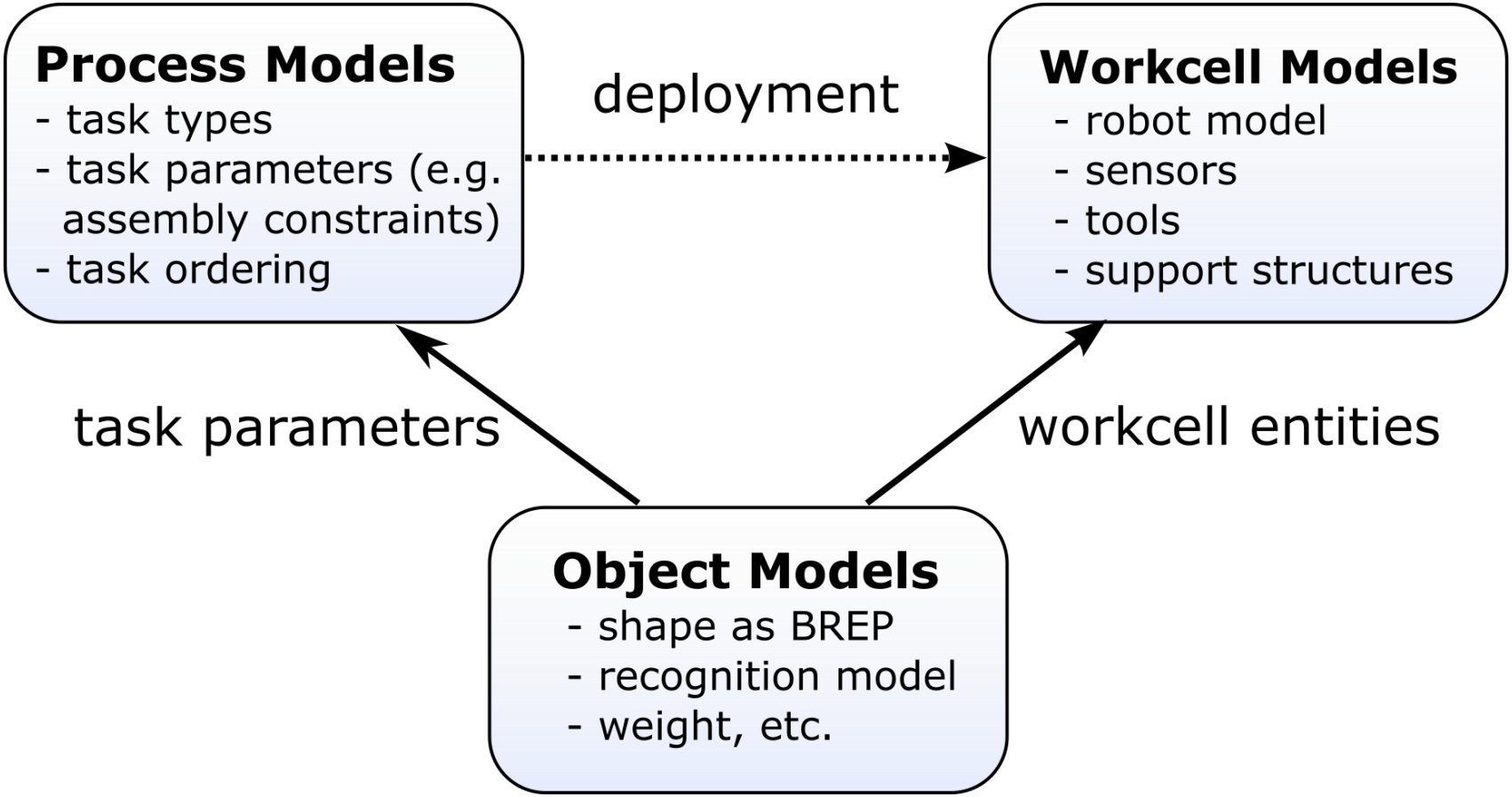

Intuitive interfaces at the front

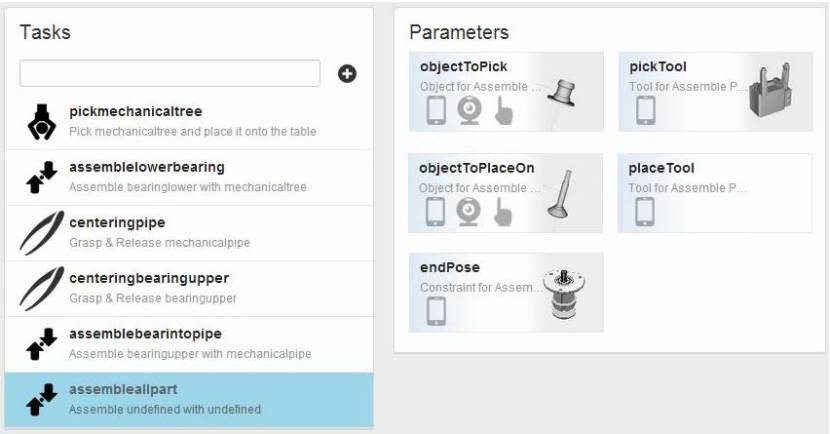

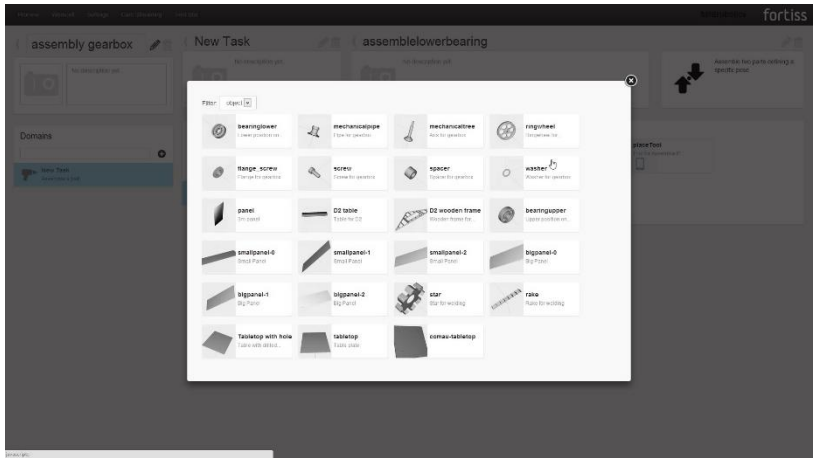

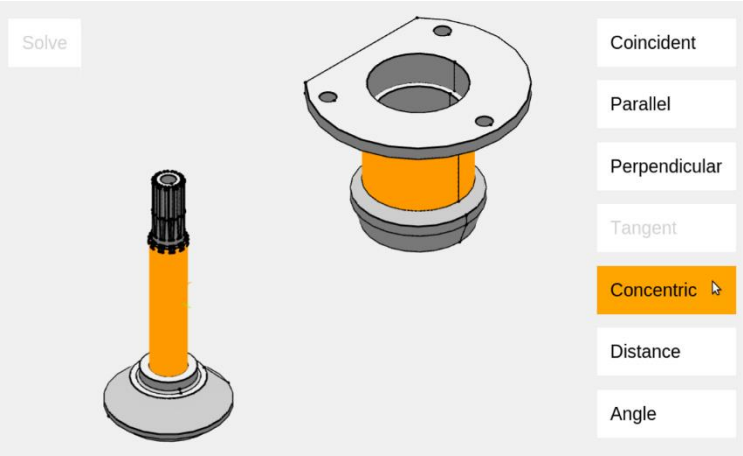

Object Models

Geometry, size, material, …

Bounding box

Width/height/depth

Origin

X/Y/Z-axis

Mass

Material properties

Polygon triangulation

Grasp positions

Deep geometry representation

…

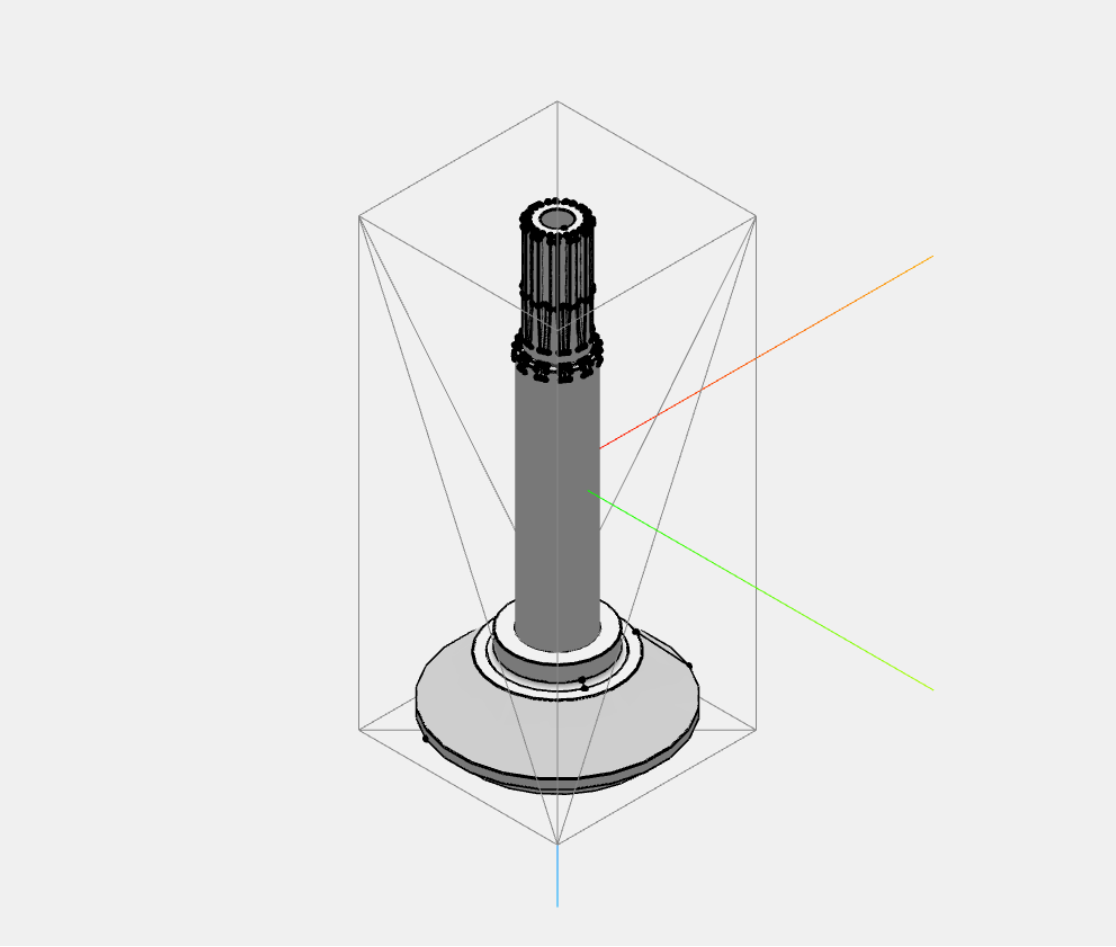

Geometry models of solid objects

Different schemes

- Approximation
  - Polygons
  - Voxels

➔ Fixed level of detail

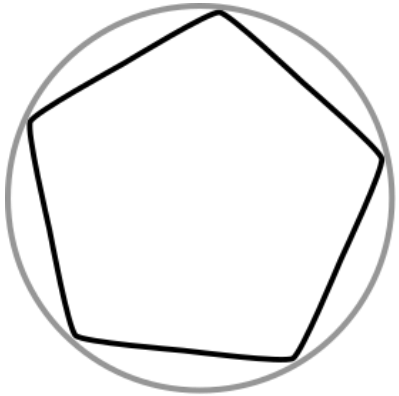

- Exact representation
  - Constructive solid geometry (boolean composition of primitives)
  - Boundary representation (BREP) used by CAD model standards (STEP, IGES)

➔ Mathematical models are known

➔ Triangulated data generated on-the-fly for different applications

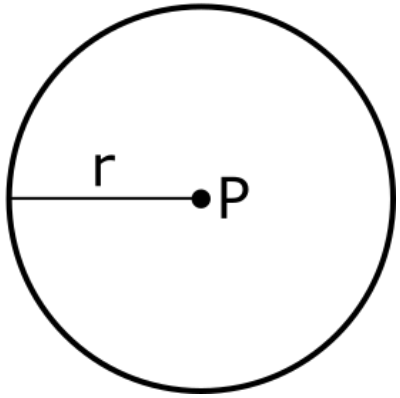

Boundary Representation (BREP) of objects

Basic BREP Structure

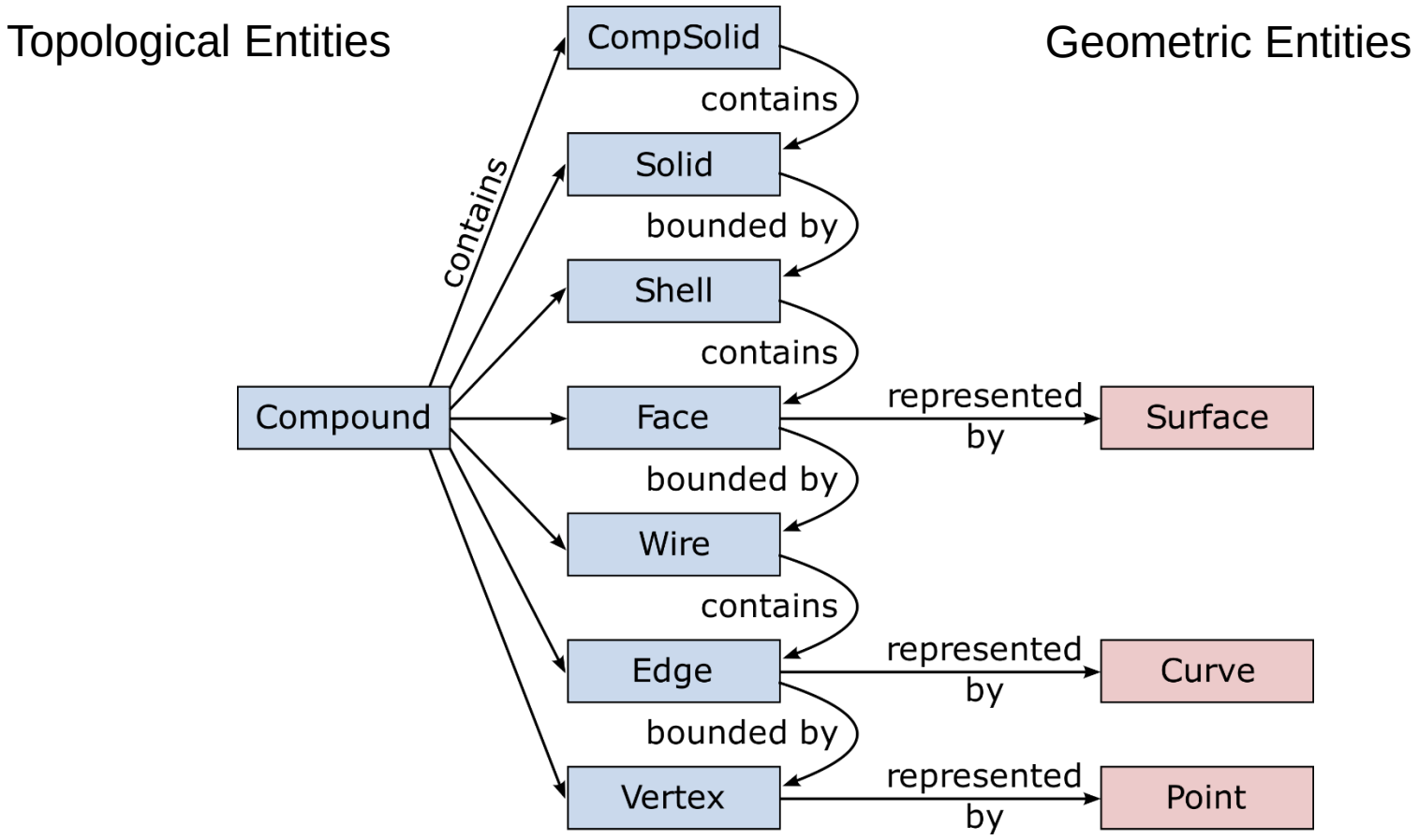

OntoBREP

Semantic Description Language

- Using the Web Ontology Language (OWL)
- Taxonomy of topological and geometric entities
- Properties, i.e. topological relations and geometric parameters

Example: cylinder

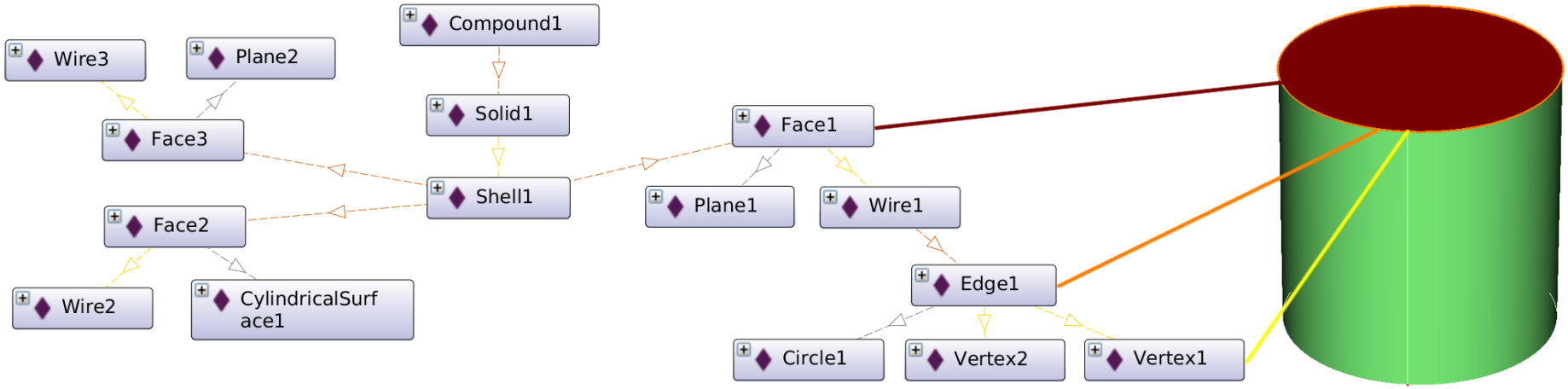

Geometric Interrelation Constraints

Semantic description transparent to end-user

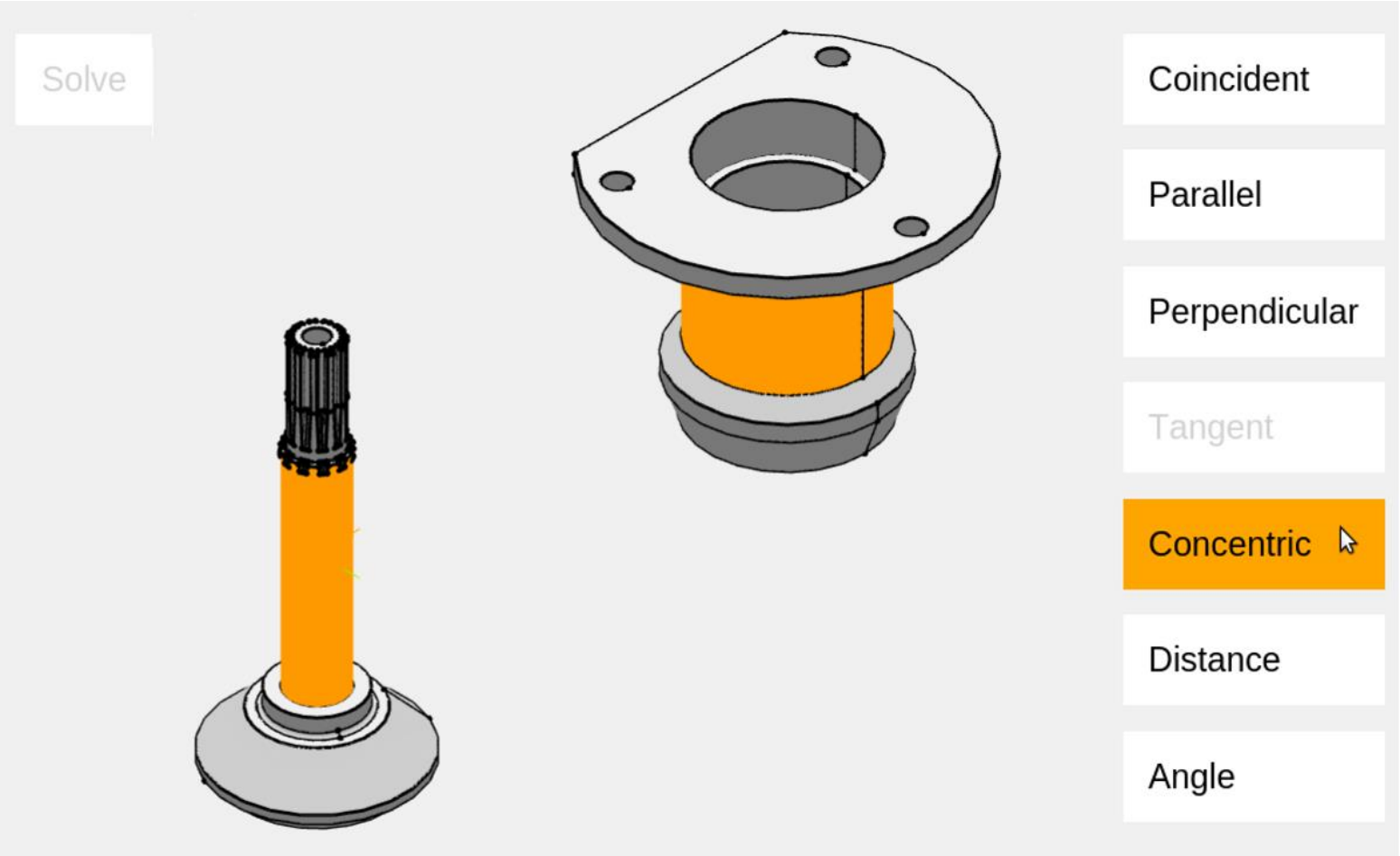

Example Applications

OntoBREP use-cases

- Parameterization of semantic task descriptions
  - Geometric constraints as assembly parameters
  - Constraints are solved based on perception of involved objects
  - Generates target poses

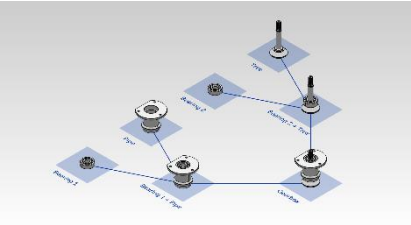

Perzylo 2015
RSS WS

- Object recognition and pose estimation
  - Improves primitive shape based recognition
  - Underspecified object poses can be described, e.g. for symmetrical objects

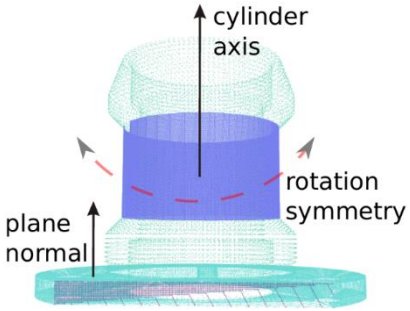

Somani 2015
ROBIO

- Constrained-based robot control
  - Task constraints translate to constraints on the executing robot‘s pose
  - Robot controller may exploit nullspace information

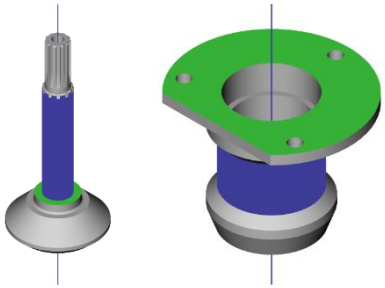

Somani 2015
IROS

Automatic Conversion to OntoBREP formalism

Import of STEP and IGES models

- Conversion tool utilizing
  - OpenCascade (OCC) CAD kernel
  - JNI-based Java wrapper for OCC
  - OWL API
- Quantitative Evaluation
  - Conversion time
  - Load time in Sesame triple store (OWLIM)

Model	*Converting STEP*	*Loading OWL in Sesame*	
	time in ms	*time in ms*	*axioms per ms*
CUBE	365	25	57.2
FRAME	805	343	77.0
ROTOR	1018	704	60.9

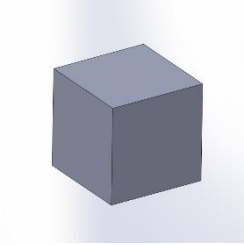

cube

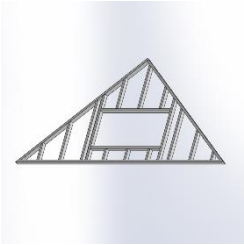

frame

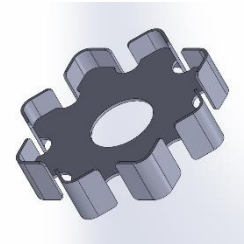

rotor

Open Source Release

OntoBREP on Github

Github repository:
https://github.com/ontobrep

- OntoBREP ontology file (OWL)
- Example models
- Importer for STEP and IGES files
- Java wrapper for OpenCascade (required by STEP/IGES importer)

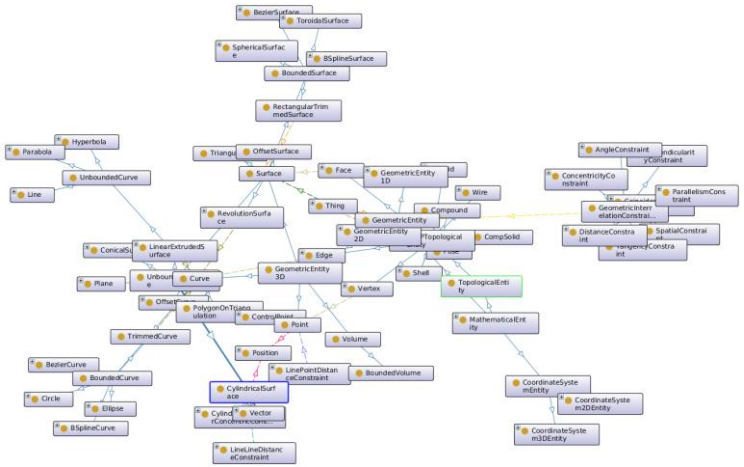

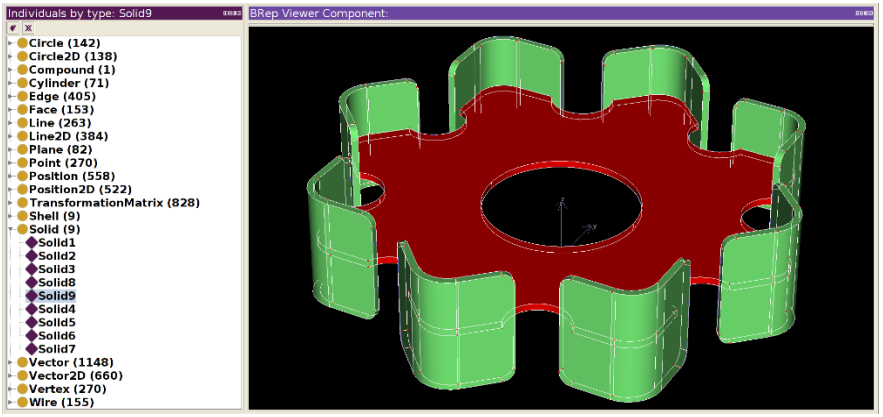

Thank you!

Questions?

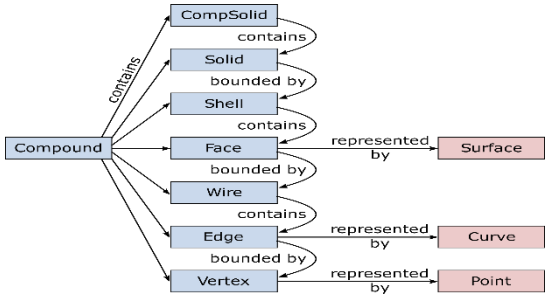

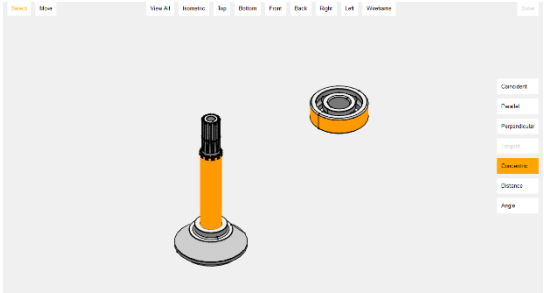

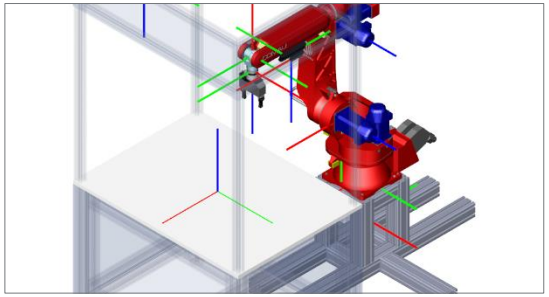

Alexander Perzylo

fortiss GmbH
An-Institut Technische Universität München
Guerickestraße 25 · 80805 München · Germany

perzylo@fortiss.org
www.fortiss.org

Related Publications

- Alexander Perzylo, Nikhil Somani, Stefan Profanter, Markus Rickert, and Alois Knoll. **Toward efficient robot teach-in and semantic process descriptions for small lot sizes**. Workshop on Combining AI Reasoning and Cognitive Science with Robotics. RSS 2015.

- Nikhil Somani, Andre Gaschler, Markus Rickert, Alexander Perzylo, and Alois Knoll. **Constraint-based task programming with CAD semantics: From intuitive specification to real-time control**. IROS 2015.

- Nikhil Somani, Alexander Perzylo, Caixia Cai, Markus Rickert, and Alois Knoll. **Object detection using boundary representations of primitive shapes**. ROBIO 2015.

Quantitative Evaluation

OWL model related metrics

- Comparison of file sizes of
  - standard CAD formats and OWL representations
  - Compressed and uncompressed variants

Model	*File Size in kB*									
	BREP		*STEP*		*IGES*		*OWL Manchester*		*OWL RDF/XML*	
	plain	*zipped*	*plain*	*zipped*	*plain*	*zipped*	*plain*	*zipped*	*plain*	*zipped*
CUBE	4.0	0.9	15.9	2.9	21.2	1.6	51.6	3.1	150.0	4.7
FRAME	143.5	15.9	353.7	38.9	444.7	27.4	1010.3	49.6	2764.3	69.6
ROTOR	170.8	20.0	650.8	63.3	896.0	54.6	1636.9	79.6	4455.3	115.8

Quantitative Evaluation (1)

From BREP entities to OWL axioms

Model	*Number of topological BREP entities*								
	Ve [a]	*Ed* [b]	*Fa* [c]	*Wi* [d]	*Sh* [e]	*So* [f]	*CS* [g]	*Co* [h]	*Total*
CUBE	8	12	6	6	1	1	0	1	35
FRAME	152	228	114	114	19	19	0	1	647
ROTOR	270	405	153	155	9	9	0	1	1002

[a]Vertex [b]Edge [c]Face [d]Wire [e]Shell [f]Solid [g]CompSolid [h]Compound

Number of OWL axioms							
C [i]	*OP* [j]	*DP* [k]	*I* [l]	*CA* [m]	*OPA* [n]	*DPA* [o]	*Total*
15	12	17	206	206	281	694	1431
16	12	17	3915	3915	5358	13186	26419
19	12	18	6068	6068	8342	22314	42841

[i]Class [j]Object property [k]Data property [l]Individual [m]Class assertion
[n]Object property assertion [o]Data property assertion

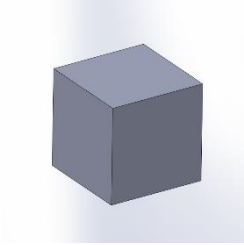

cube

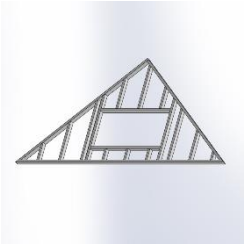

frame

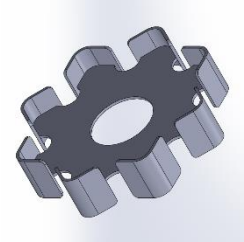

rotor

OntoBREP model „rotor“(2)

Solid

```
Individual: cad:Solid9
  Types:
    cad:Solid
  Facts:
    cad:boundedBy  cad:Shell9
```

OntoBREP model „rotor“(3)

Shell

```
Individual: cad:Solid9
  Types:
    cad:Solid
  Facts:
    cad:boundedBy  cad:Shell9
```

➡

```
Individual: cad:Shell9
  Types:
    cad:Shell
  Facts:
    cad:contains  cad:Face85,
    cad:contains  cad:Face97,
    ...
    cad:contains  cad:Face74
```

OntoBREP model „rotor“(4)

Face

```
Individual: cad:Solid9
  Types:
    cad:Solid
  Facts:
    cad:boundedBy  cad:Shell9
```

➡

```
Individual: cad:Shell9
  Types:
    cad:Shell
  Facts:
    cad:contains  cad:Face85,
    cad:contains  cad:Face97,
    ...
    cad:contains  cad:Face74
```

⬇

```
Individual: cad:Face97
  Types:
    cad:Face
  Facts:
    cad:representedBy  cad:CylindricalSurface34,
    cad:boundedBy      cad:Wire99,
    cad:locatedAt      cad:TransformationMatrix739,
    cad:isReversed     true
```

OntoBREP model „rotor“(5)

Face

```
Individual: cad:Face97
  Types:
    cad:Face
  Facts:
    cad:representedBy  cad:CylindricalSurface34,
    cad:boundedBy      cad:Wire99,
    cad:locatedAt      cad:TransformationMatrix739,
    cad:isReversed     true
```

OntoBREP model „rotor“(6)

CylindricalSurface

```
Individual: cad:CylindricalSurface34
  Types:
    CylindricalSurface
  Facts:
    cad:directionX    Vector880,
    cad:directionY    Vector881,
    cad:directionZ    Vector879,
    cad:hasPosition   Position469,
    cad:radius        "67.5"^^xsd:double
```

```
Individual: cad:Face97
  Types:
    cad:Face
  Facts:
    cad:representedBy   cad:CylindricalSurface34,
    cad:boundedBy       cad:Wire99,
    cad:locatedAt       cad:TransformationMatrix739,
    cad:isReversed      true
```

OntoBREP model „rotor“(7)

Wire

```
Individual: cad:Wire99
  Types:
    cad:Wire
  Facts:
    cad:firstElement   cad:Edge234,
    cad:contains       cad:Edge234
    cad:contains       cad:Edge201,
    cad:contains       cad:Edge147,
    cad:contains       cad:Edge145,
```

```
Individual: cad:CylindricalSurface34
  Types:
    CylindricalSurface
  Facts:
    cad:directionX    Vector880,
    cad:directionY    Vector881,
    cad:directionZ    Vector879,
    cad:hasPosition   Position469,
    cad:radius        "67.5"^^xsd:double
```

```
Individual: cad:Face97
  Types:
    cad:Face
  Facts:
    cad:representedBy   cad:CylindricalSurface34,
    cad:boundedBy       cad:Wire99,
    cad:locatedAt       cad:TransformationMatrix739,
    cad:isReversed      true
```

OntoBREP model „rotor“(8)

Wire

```
Individual: cad:Wire99
  Types:
    cad:Wire
  Facts:
    cad:firstElement  cad:Edge234,
    cad:contains      cad:Edge234
    cad:contains      cad:Edge201,
    cad:contains      cad:Edge147,
    cad:contains      cad:Edge145,
```

OntoBREP model „rotor“(10)

Edge

```
Individual: cad:Wire99
  Types:
    cad:Wire
  Facts:
    cad:firstElement  cad:Edge234,
    cad:contains      cad:Edge234
    cad:contains      cad:Edge201,
    cad:contains      cad:Edge147,
    cad:contains      cad:Edge145,
```

⬇

```
Individual: cad:Edge234
  Types:
    cad:Edge
  Facts:
    cad:representedBy  cad:Circle97,
    cad:boundedBy      cad:Vertex98,
    cad:boundedBy      cad:Vertex99,
    cad:adjacentEdge   cad:Edge147,
    cad:locatedAt      TransformationMatrix538
```

OntoBREP model „rotor“(11)

Vertex

```
Individual: cad:Wire99
  Types:
    cad:Wire
  Facts:
    cad:firstElement   cad:Edge234,
    cad:contains       cad:Edge234
    cad:contains       cad:Edge201,
    cad:contains       cad:Edge147,
    cad:contains       cad:Edge145,
```

```
Individual: cad:Vertex98
  Types:
    cad:Vertex
  Facts:
    cad:locatedAt       TransformationMatrix52,
    cad:representedBy   Point52,
    cad:isReversed      false
```

```
Individual: cad:Edge234
  Types:
    cad:Edge
  Facts:
    cad:representedBy   cad:Circle97,
    cad:boundedBy       cad:Vertex98,
    cad:boundedBy       cad:Vertex99,
    cad:adjacentEdge    cad:Edge147,
    cad:locatedAt       TransformationMatrix538
```

Geometric Interrelation Constraints

Class definitions (in Manchester OWL Syntax)

```
Class: PlanePlaneCoincidenceConstraint
  SubClassOf:
    CoincidenceConstraint,
    baseGeometry exactly 1 Plane,
    constrainedGeometry exactly 1 Plane
    hasNullSpace exactly 1 Plane
```

```
Class: CylinderCylinderConcentricConstraint
  SubClassOf:
    ConcentricityConstraint,
    baseGeometry exactly 1 CylindricalSurface,
    constrainedGeometry exactly 1
        CylindricalSurface,
    hasNullSpace exactly 1 Line
```